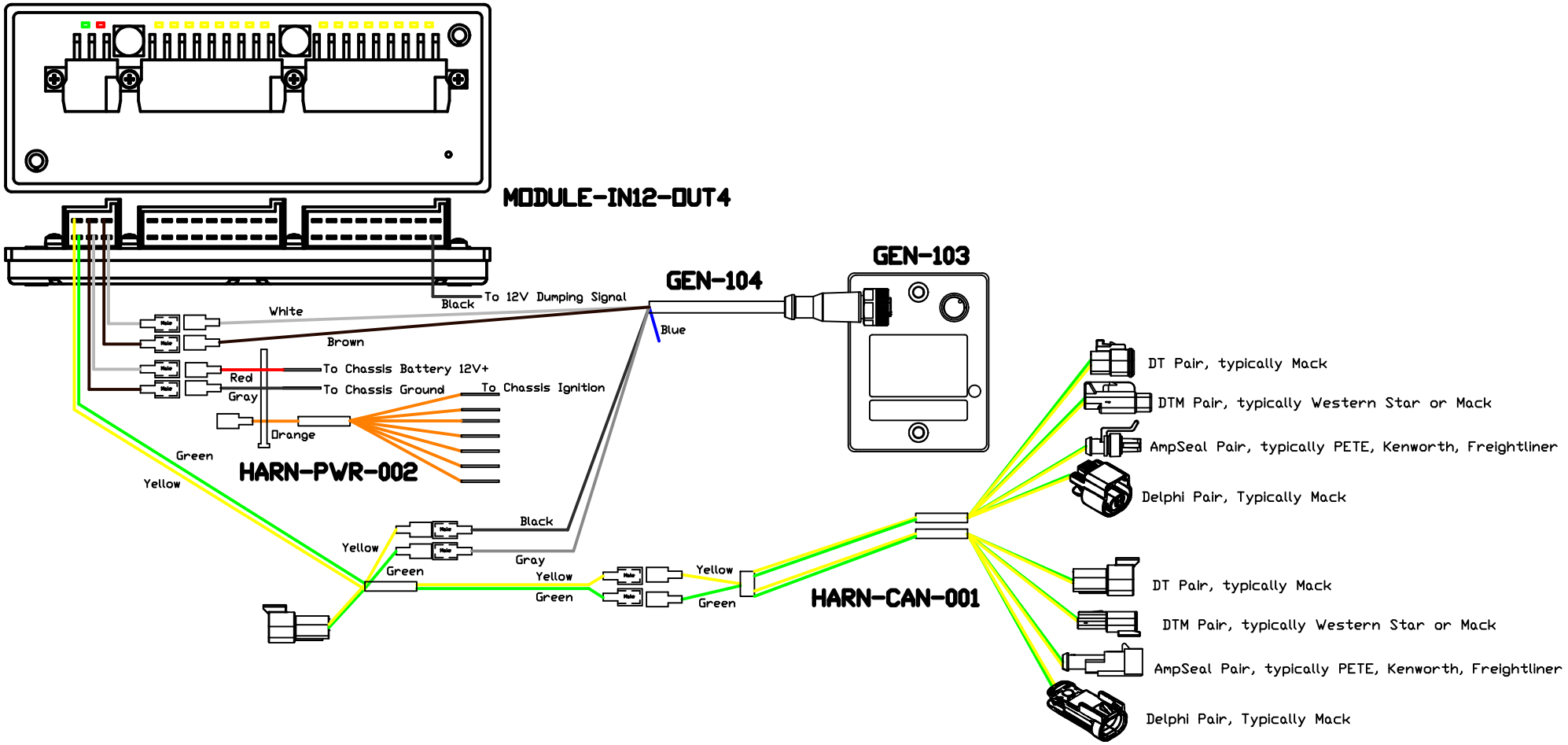

Sensor Base Dump Truck